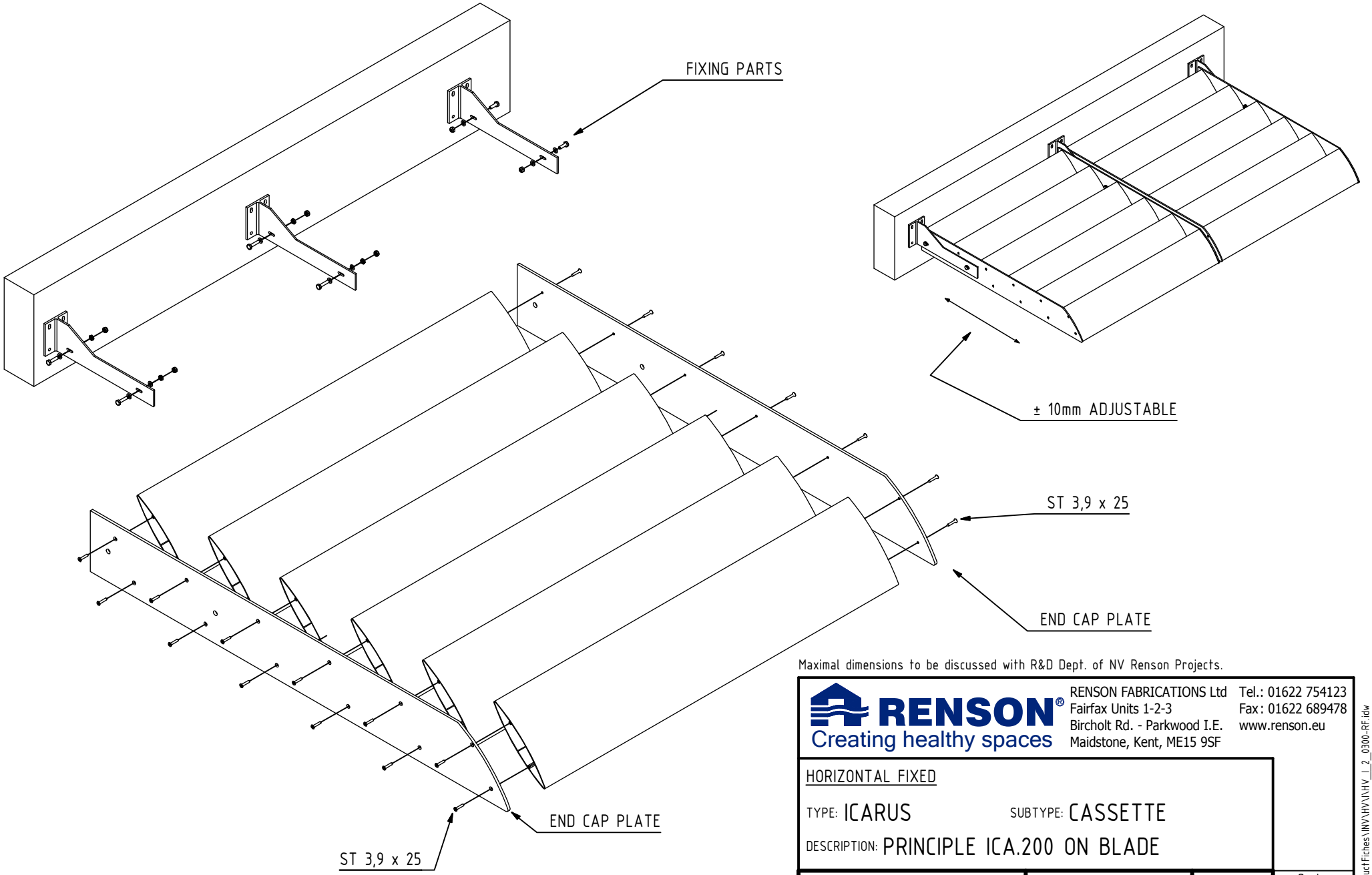

Maximal dimensions to be discussed with R&D Dept. of NV Renson Projects.

RENSON® Creating healthy spaces
RENSON FABRICATIONS Ltd
Fairfax Units 1-2-3
Bircholt Rd. - Parkwood I.E.
Maidstone, Kent, ME15 9SF
Tel.: 01622 754123
Fax: 01622 689478
www.renson.eu

HORIZONTAL FIXED

TYPE: ICARUS SUBTYPE: CASSETTE

DESCRIPTION: PRINCIPLE ICA.200 ON BLADE

PRODUCT SHEET	SHEET N°	ISSUE	Scale: 1/10
	HV-I-2.0300	V.01	Orig. format: A4

R:\CAD\91. ProductFiches\INV\HV\I\HV_I_2_0300-RF.idw

All rights reserved to NV RENSON PROJECTS. This drawing shall not be copied nor showed to third parties without written permission of NV RENSON PROJECTS.